specification 产品说明书 v1.0

深紫外 UVC LED：270~280 nm

Beam angle 120°

1.产品简介 Product Introduction

本产品是一款可以同时发射 270~285nm 和 390~ 405nm 紫外光的深紫外 LED 器件。它采用高导热氧化铝陶瓷支架，石英玻璃透镜及无铅焊料等封装材料，具有可靠性高、热阻低、环保，低光衰，发光角度大等优点，是理想的深紫外光源贴片器件。

This product is a deep ultraviolet LED device that can emit ultraviolet light at 270~285nm and 390~405nm at the same time. It uses high thermal conductivity alumina ceramics

Porcelain bracket, quartz glass lens and lead-free solder and other packaging materials have the advantages of high reliability, low thermal resistance, environmental protection, low light attenuation, and large light angle.

Ideal DUV light source chip device.

2.应用领域： 2.Application areas:

杀菌消毒； Sterilization and disinfection;

医用光疗； Medical phototherapy;

光学传感器； Optical sensor;

生物分析/检测；Biological analysis/testing;

防伪检测。Anti-counterfeiting detectio

3.光电参数 Optical parameters

3.1 UVC Optical parameters 光电参数 (Ta = 25 ℃，RH=30%)

Item	Symbol	Unit	数值
UVC 峰值波长 Peak Wavelength	λ_p	nm	270~285
UVC 辐射功率 Radiant Flux	P_0	mW	3-6
UVC 驱动电流 Forward Current	I_f	mA	40
UVC 工作电压 Forward Voltage	V_f	V	5 ~ 8
UVC 最大工作电流 Max Forward Current	I_{fmax}	mA	120

3.2 UVA Optical parameters 光电参数（Ta=25℃，RH=30%）

Item	Symbol	Unit	数值
UVA 峰值波长 Peak Wavelength	λ_p	nm	390~405
UVA 辐射功率 Radiant Flux	P_0	mW	60-150
UVA 驱动电流 Forward Current	I_f	mA	40-80
UVA 工作电压 Forward Voltage	V_f	V	3.0~4.0
UVA 最大工作电流 Max Forward Current	I_{fmax}	mA	100

备注:

[1]光功率是指使用积分球（杭州远方 ATA-1000）收集到的总光输出功率；Optical power refers to the total optical output power collected using an integrating sphere (Hangzhou Yuanfang ATA-1000);

[2]所有数据均是基于深紫科技测试仪器得到的结果，但根据测试设备的条件，某些值可能会略有不同，注入电流的增加会导致温度升高， LED 灯珠的光衰减将加快，使用寿命将缩短；置于上述极限范围值以外条件测试或使用时，可能会影响器件的可靠性并造成永久损坏。All data are based on the results obtained by the Deep Purple Technology test instrument, but some values may be slightly different according to the conditions of the test equipment. The increase of the injected current will cause the temperature to rise, and the light attenuation of the LED lamp beads will Speeding up will shorten the service life; when tested or used under conditions beyond the above limits, it may affect the reliability of the device and cause permanent damage.

[3]本产品在使用时建议提供良好的散热环境或散热系统,以获得最佳使用效果；This product is recommended to provide a good heat dissipation environment or heat dissipation system to obtain the best use effect;

3.3 典型特性曲线
Typical characteristic curve

以下测试数据源自深紫科技，视抽样情况的不同，实际曲线将会呈现不同差异
The following test data is from Shenzi Technology. Depending on the sampling situation, the actual curve will show different differences

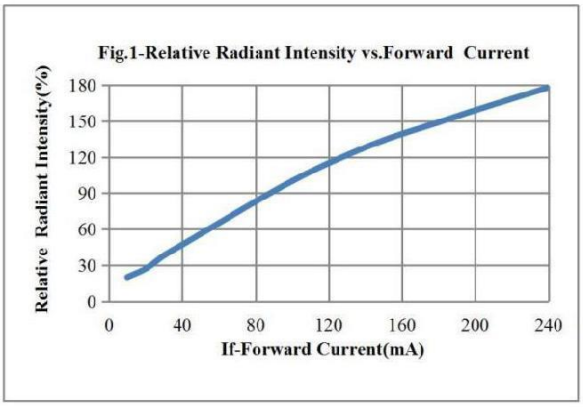

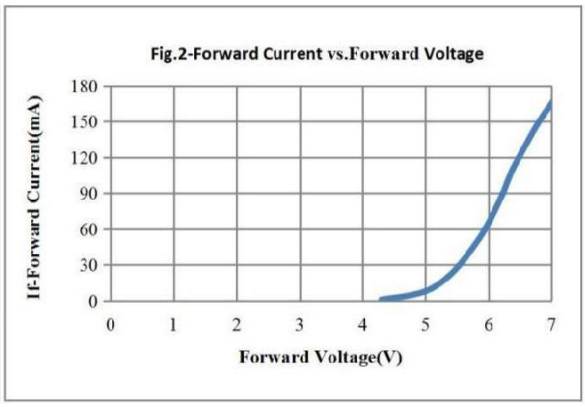

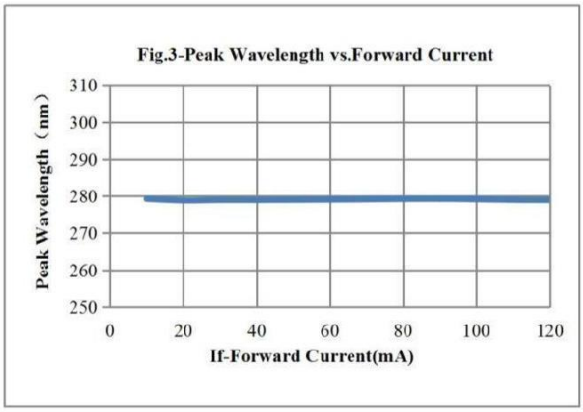

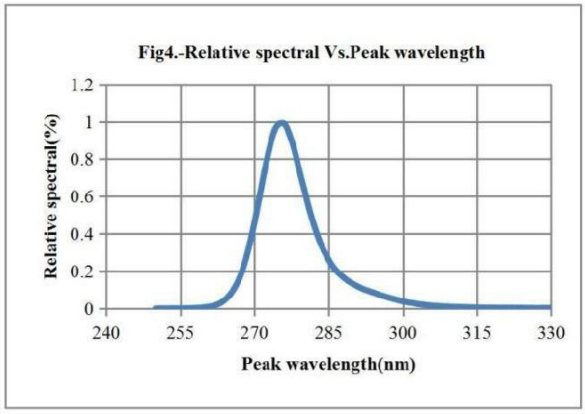

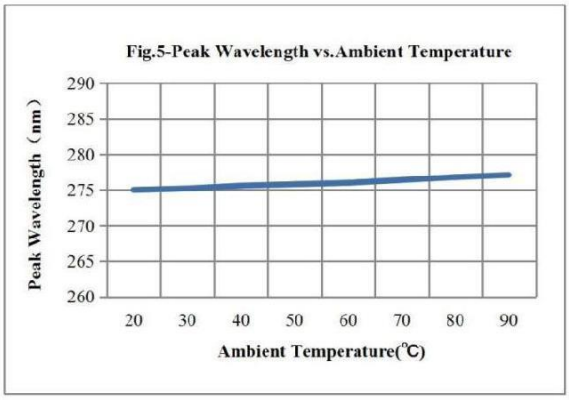

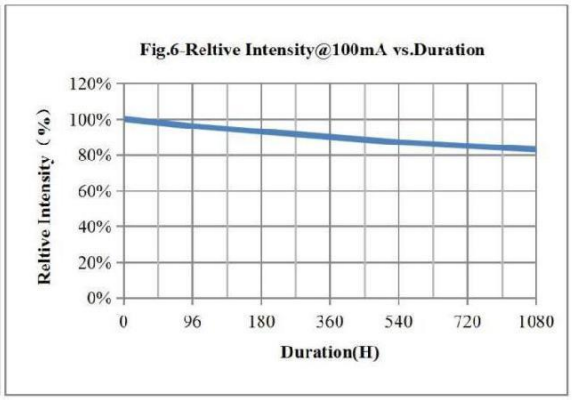

4.器件尺寸
Device size

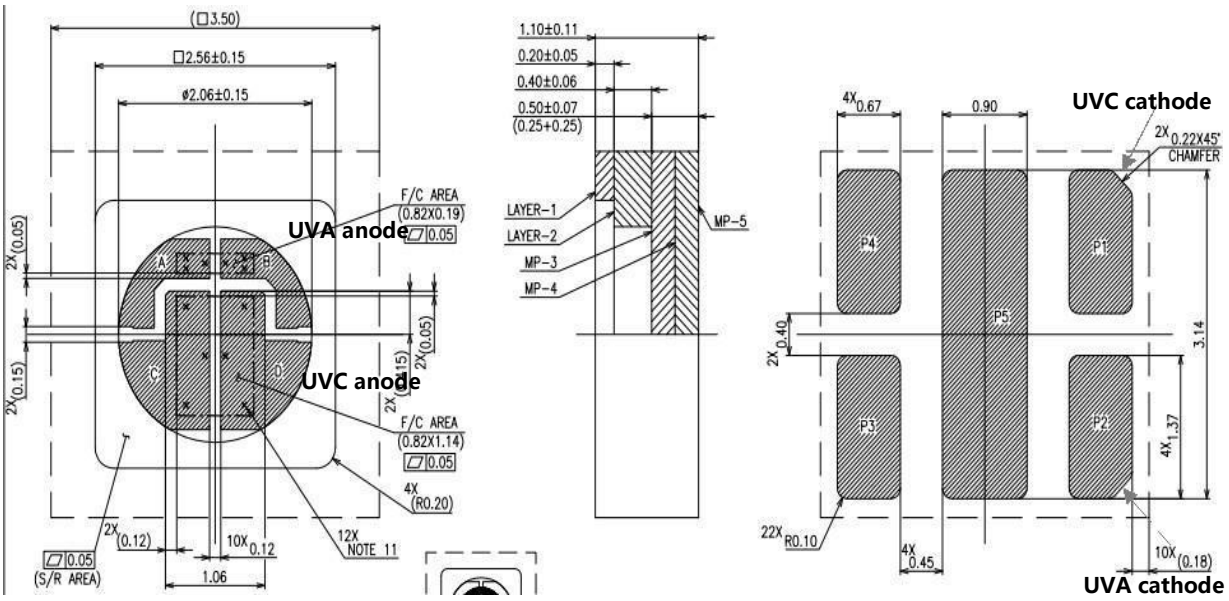

备注:

[1]封装体外型尺寸: 3.5×3.5×1.3 (L×W×H) [单位 : mm]。

[2]背面缺角为负极标识点，编带产品圆孔端为负极;

[3]尺寸公差±0.1mm。

Remarks:

[1] Package size: 3.5×3.5×1.3 (L×W×H) [Unit: mm].

[2] The missing corner on the back is the identification point of the negative electrode, and the round hole end of the braided product is the negative electrode;

[3] Dimensional tolerance ±0.1mm.

5.推荐设计 Recommended design

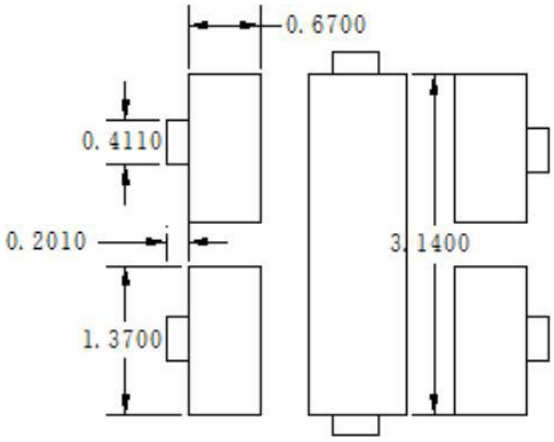

备注:

该推荐焊盘设计仅供参考。

Remarks:

This recommended pad design is for reference only.

6.回流工艺 Reflow process

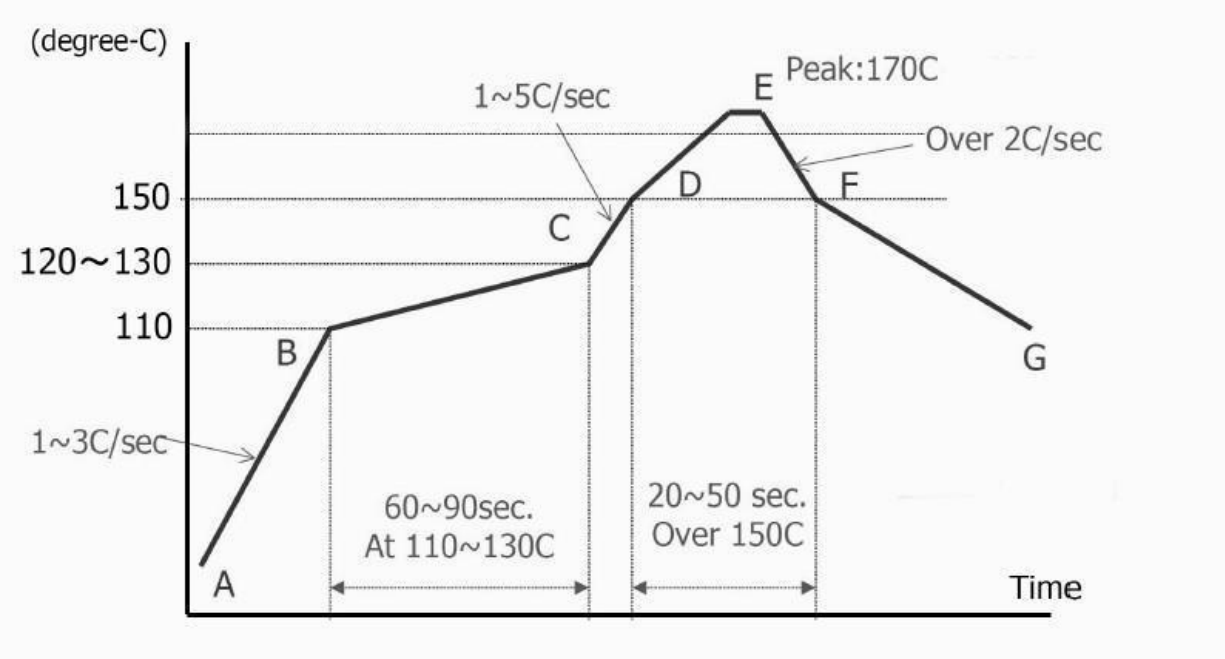

贴片应使用**低温锡膏**进行回流焊接，峰值温度**不应大于 170 ℃**，峰值时间控制在 20 秒左右，回流时间不应大于 5 分钟。推荐锡铋/锡银铋系列的锡膏，如 Sn42 / Ag1.0 / Bi57。

The patch should be reflow soldered with low-temperature solder paste, the peak temperature should not be greater than 170 ℃, the peak time should be controlled at about 20 seconds, and the reflow time should not be greater than 5 minutes. The tin paste of tin-bismuth/tin-silver-bismuth series is recommended, such as Sn42/Ag1.0/Bi57.

注意：

[1] 回流焊接不应超过一次；

[2] 焊接深紫外 LED 后不应进行维修，当修理不可避免时，必须使用合适的工具；

[3] 焊接时，请勿在加热过程中对深紫外 LED 施加压力；

[4] 建议使用 7 温区以上的对流式回流焊机。

note:

[1] Reflow soldering should not exceed one time;
[2] Repair should not be performed after welding deep ultraviolet LEDs. When repairs are inevitable, appropriate tools must be used;
[3] When welding, do not apply pressure to the deep ultraviolet LED during heating;
[4] It is recommended to use convection reflow soldering machine above 7 temperature zone.

7.包装参数 Package

7.1 本产品将以编带的形式收纳和储存，正面朝上，负极超载带圆孔向。编带相关规格尺寸如下图所示：
7.1 This product will be stored and stored in the form of braid, with the front side facing up and the negative overload tape facing round. The related specifications and dimensions of taping are shown in the following figure:

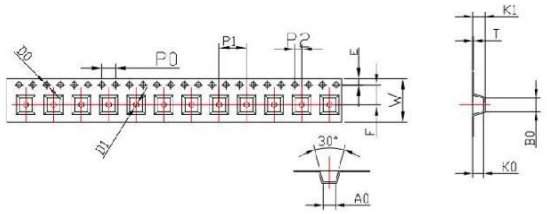

symbol	AO	BO	KO	PO	P	P2	长度/盘
Spec	3.90±0.1	3.90±0.1	1.60±0.1	4.0±0.10	8.0±0.1	2.00±0.10	400M
symbol	W	T	E	F	D	D1	元件/盘
Spec	12.0±0.3	0.30±0.05	1.75±0.10	5.5±0.1	$1.50^{+0.1}_{-0.1}$	1.50±0.10	

7.2 容纳有产品的编带将以卷盘盘绕收纳，前段留有 15-20 颗，后段留有 80-120 颗空位以方便作业，编带末端美纹纸粘贴收尾
7.2 The braid containing the product will be coiled and stored in a reel. There are 15-20 pieces in the front section and 80-120 pieces in the rear section for easy operation. Masking paper at the end of the tape is pasted to the end

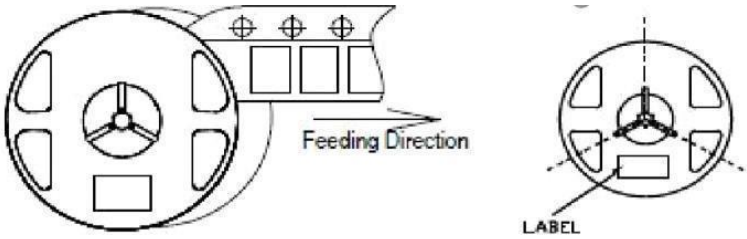

7.3 容纳有产品的卷盘将以铝箔袋真理包装，并贴士标签
7.3 The reel containing the product will be packaged in aluminum foil bags and labeled

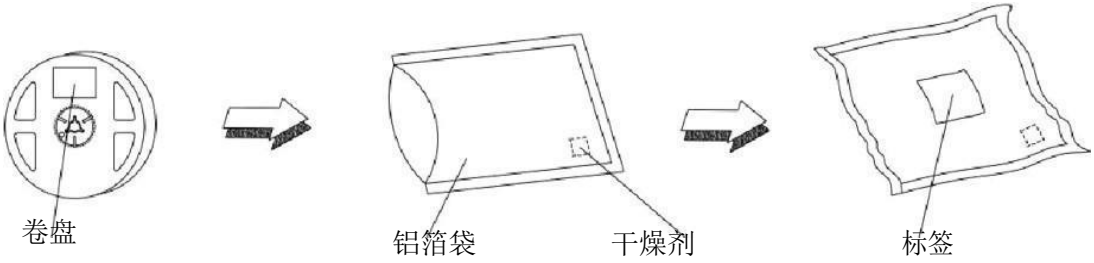

备注：

[1].载体外倾角不大于 1mm / 100mm，长度为 250mm;

[2]所有尺寸符合 EIA-481-B 要求;

[3]材料：导电聚酯聚苯乙烯系塑料。

Remarks:

[1] The camber angle of the carrier is not more than 1mm / 100mm, and the length is 250mm;
[2] All dimensions meet the requirements of EIA-481-B;
[3] Material: conductive polyester polystyrene plastic.

8.可靠测试 Reliable test

测试项目 Test items	实验条件 Conditions	标准 Standard	失效比例 Failure rate
常规驱动 Conventional drive	T_a=25℃，标定电流，持续点亮 1000 小时 Ta=25℃, calibration current, continuous lighting for 1000 hours	死灯	0/35
冷热冲击 Thermal shock	-40℃-120℃冷热冲击 500 次循环，15min/cycle -40℃-120℃ cold and heat shock 500 cycles, 15min/cycle	死灯	0/35
回流焊接 Reflow soldering	峰值温度＜170℃，10 温区回流炉，1 次 Peak temperature <170℃, 10 temperature zone reflow oven, 1 time	死灯	0/100
抗静电 Antistatic	R=1.5kΩ, C=100pF，Voltage level=2kV	死灯	0/10

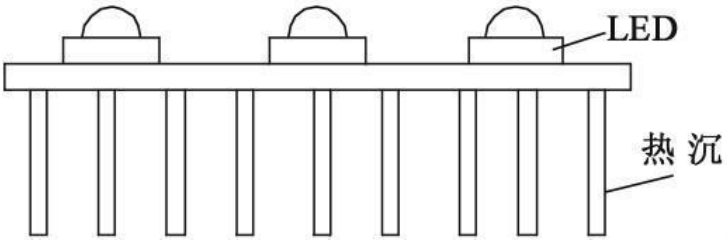

深紫外 LED 光电转化效率较低，请合理配置**散热设备**，避免深紫外 LED 因热聚集导致损坏。
The photoelectric conversion efficiency of deep ultraviolet LED is low, please configure the heat dissipation equipment reasonably to avoid the damage of deep ultraviolet LED due to heat accumulation.

注意:

[1]所有装配工人，观察员和旁观者必须进行眼睛和皮肤保护；

[2] 禁止裸眼观察（包括通过显微镜）和在操作中裸露处理深紫外 LED；

[3] 深紫外光线很容易被污染物吸收，切勿触摸深紫外灯珠的光学结构。

note:

[1] All assembly workers, observers and bystanders must protect eyes and skin;

[2] It is forbidden to observe with the naked eye (including through a microscope) and to expose the deep ultraviolet LED in operation;

[3]Deep ultraviolet light is easily absorbed by pollutants. Do not touch the optical structure of deep ultraviolet lamp beads.